Ceraflex 2 Hole Bath Shower Mixer

ILLUSTRATED

B1823 Ceraflex 2 hole bath shower mixer dual control

ILLUSTRATED PRODUCT DETAILS

Weights

B1823 0.01 KG

Materials

B1823 Chrome Plated Brass

Finishes

B1823 Chrome (AA)

Designer

Artefakt Industriekultur

Special Notes

Suitable for balanced/unbalanced supplies. Inlets 3/4" BSP male coned for copper. Supplied with brass back nuts. Consideration should be given to safe hot water delivery and the use of an appropriate temperature reduction device, please see A5900AA, (for use with 15mm pipework) or A5901AA (for use with 22mm pipework). Unregulated flow rate for bath fill is 15 litres per minute at 0.2 bar and 32 litres per minute at 1 bar.

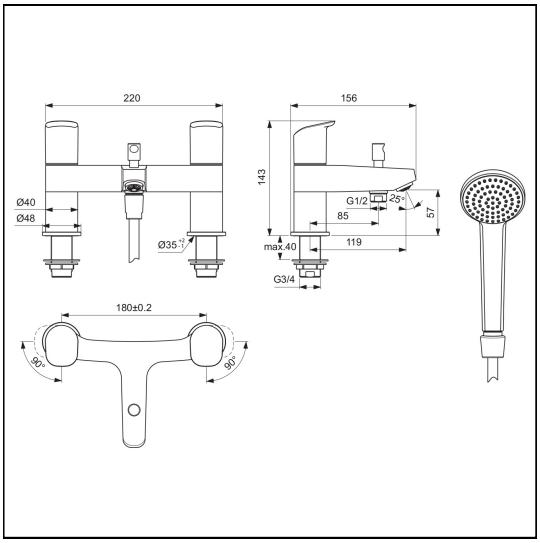

ACCREDITATIONS

WRAS APPROVED PRODUCT
1905009

Ideal Standard (UK) Ltd. makes every effort to ensure that the information provided on its website is accurate. However, we cannot guarantee this, and accept no liability for any information or advice given via its website.