Ceraplan Single Lever High Spout Basin Mixer

ILLUSTRATED

BD245 Ceraplan single lever high spout basin mixer

ILLUSTRATED PRODUCT DETAILS

Weights

BD245 2.66 KG

Materials

BD245 Chrome Plated Brass

Finishes

BD245 Chrome (AA)

Flow rates

BD245 5 Litres per minute @ 3 bar pressure

Designer

Palomba Serafini Associati

FINISH OPTIONS

(AA) Chrome

(XG) Silk Black

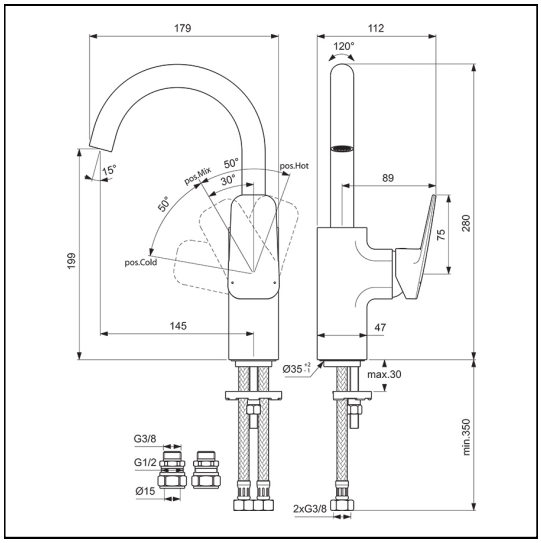

FEATURES

E: info@idealspec.co.uk | T: 0870 122 8822 | F: 0870 122 8282 | www.idealspec.co.uk

Ideal Standard (UK) Ltd. makes every effort to ensure that the information provided on its website is accurate. However, we cannot guarantee this, and accept no liability for any information or advice given via its website.

Ideal Standard